Drawing NO.	SG06(552KA)-7004A-009	Model No.	WGM370126000-552K	Voltage	12V DC

Drawing:

版次:1.0

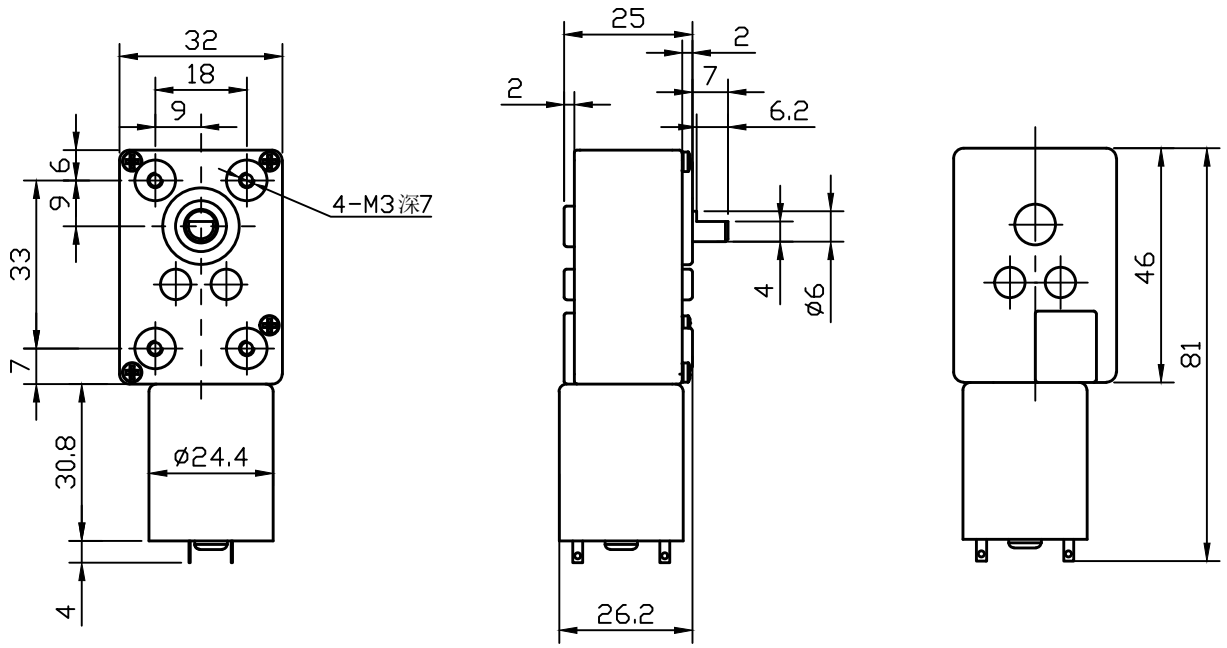

客户确认(Customer APP.):

Details:

Geared motor specification:		motor specification:	
No Load Current(mA):	≤70	No Load Current(mA):	
No Load Speed(r.p.m):	10.8±1	No Load Speed(r.p.m):	
Rated Load Torque(kgf.cm):	4	Rated Load Torque(gf.cm):	
Rated Current(mA):	≤380	Rated Current(mA):	
Rated Load Speed(r.p.m):	8±0.8	Rated Load Speed(r.p.m):	
Stall Current(mA):		Stall Current(mA):	
Stall Torque(kgf.cm):		Stall Torque(gf.cm):	
Rotation Direction:	CW/CCW	Rotation Direction:	

Remarks:					
Draw:		Rev:		App.:	